| MAPX | MODIFICATION | DATE |
|---|---|---|
| | | |

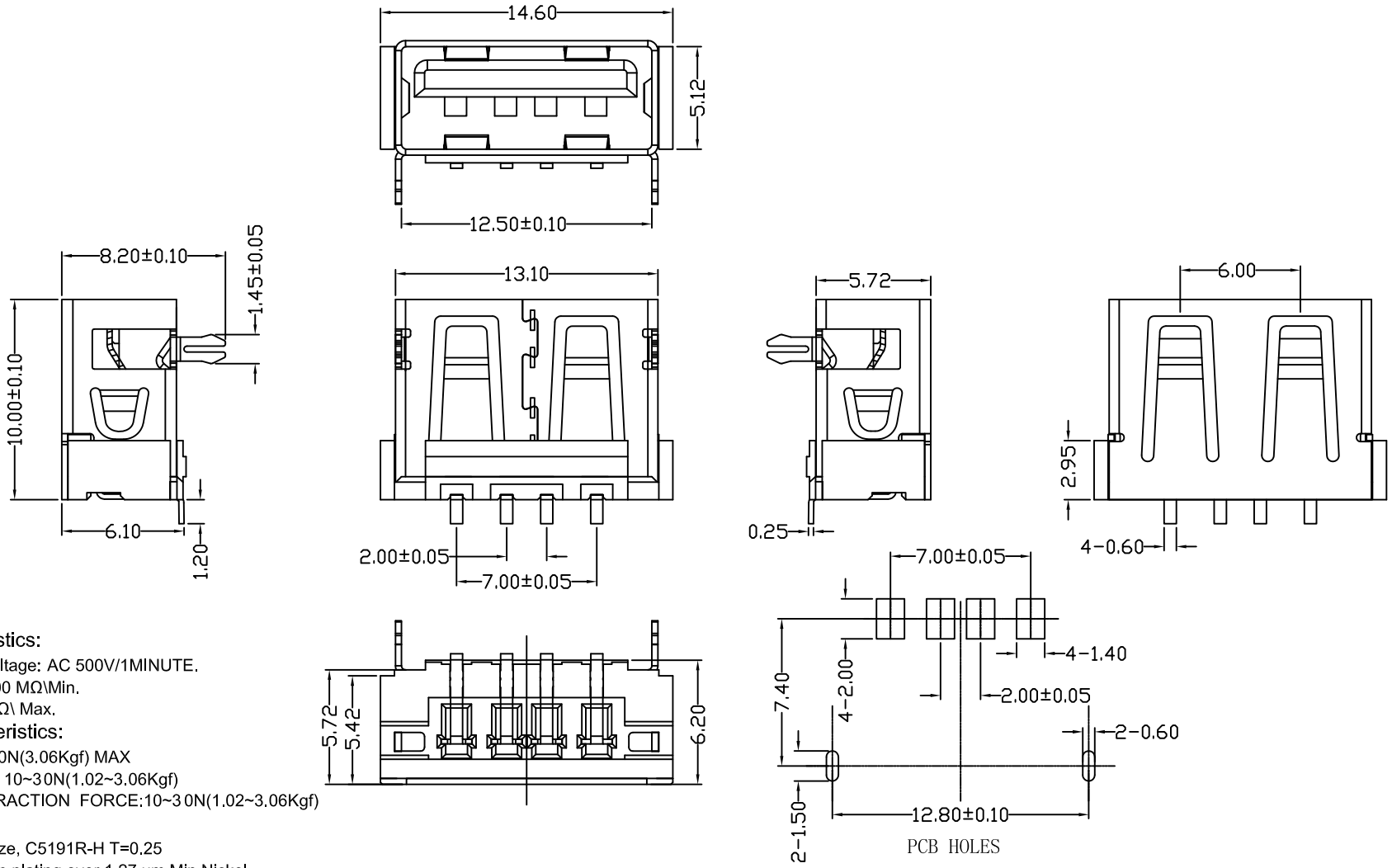


Specification:

1.Electrical Characteristics:

Dielectric Withstanding Voltage: AC 500V/1MINUTE.
Insulation Resistance: 1000 MΩ\Min.
Contact Resistance: 30 mΩ\ Max.

2.Mechanical Characteristics:

INSERTION FORCE: 30N(3.06Kgf) MAX
EXTRACTION FORCE: 10~30N(1.02~3.06Kgf)
Durability:1500cycles.EXTRACTION FORCE:10~30N(1.02~3.06Kgf)

**3. Material:**

Terminal: Phosphor Bronze, C5191R-H T=0.25
Plating: Gold 0.76 um Min plating over 1.27 um Min Nickel underplate, 2.54 um Min Sn selective plating on solder tail;
Shell: Phosphor Bronze, C5191R-H T=0.30mm
Plating: Nickel underplate 2.54 um Min;
Housing: 无卤LCP Black; UL94V-0

4.Environmental:

Operating Temperature: 0°C to +85°C.

产品图
PRODUCT CHART DWG

| 公差一览表 TOLERANCE UNLESS OTHERMSE | | | |
|---|---|---|---|
| X. | ±0.25 | X. | ±5.° |
| .X | ±0.20 | .X | ±2.° |
| .XX | ±0.15 | .XX | ±1.° |
| .XXX | ±0.10 | .XXX | ±0.5° |

| | | | | | |
|---|---|---|---|---|---|
| 单位 UNITS | MM | 制图 DRAWING | Z-Y-B | 制图料号 PRODUCT PART NO. | |
| 比例 SCALE | 1:1 | 审核 CHKD | | 产品名称 PRODUCT NO. | C42564 |
| 日期 DATE | 2011.09.02 | 核准 APPD | | 角法 VIEW | 版本 VER A0 |