ROHS

http://www.smtswitch.com

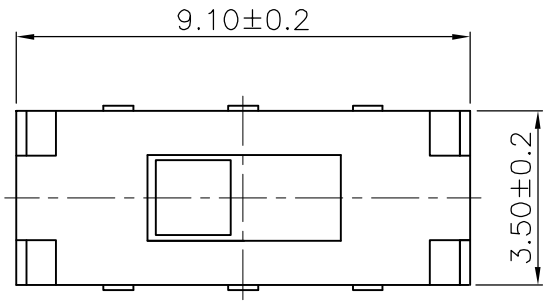

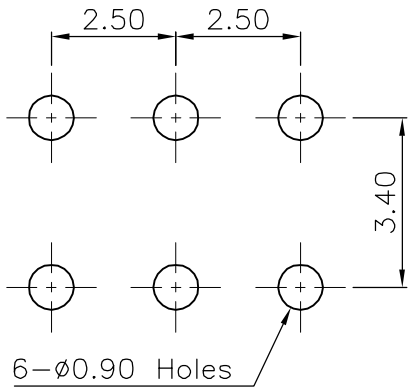

PCB Layout(Pattern side)

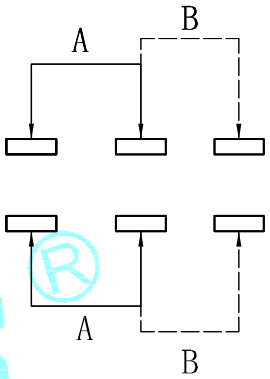

Circuit Diagram

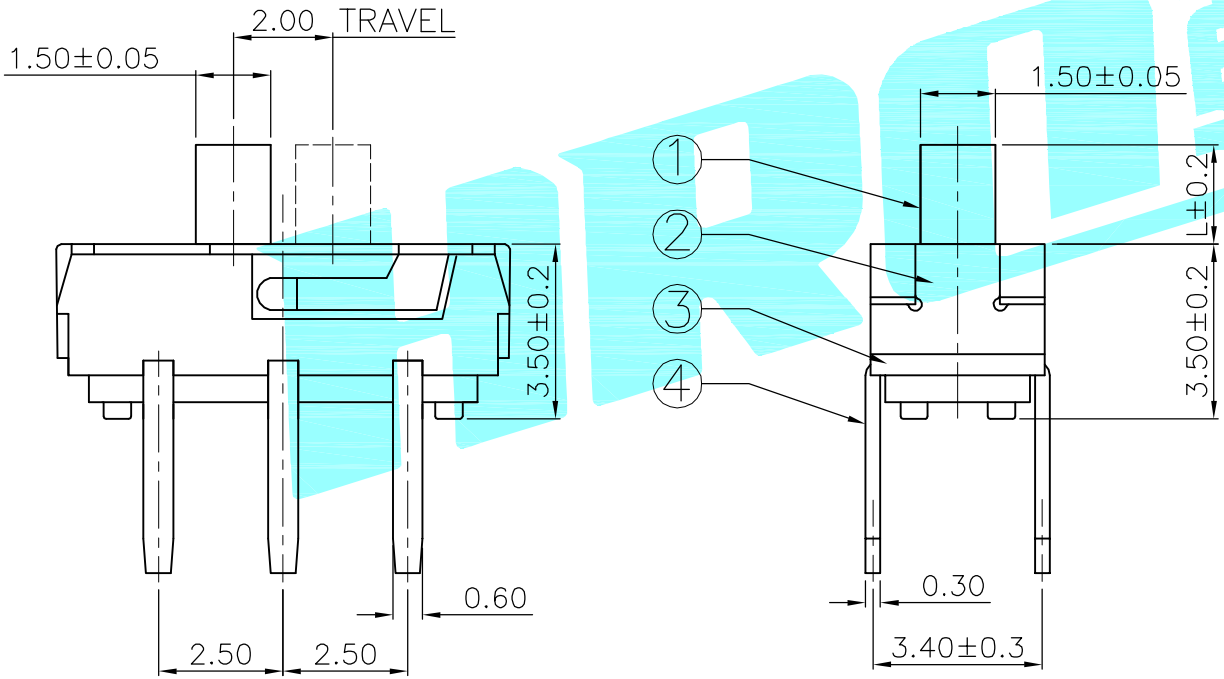

PART NO.	L	Operating force
K3-2235D-F2	2	200±100gf
K3-2235D-K2	3	
K3-2235D-L2	4	

ITEM	PART NAME	TER'NO.	QTY.	MATERIAL	FINISHING	REMARK
⑤	Contact Spring	——	2	Beryllium copper	Ag Plated	——
④	Terminal	——	6	Brass Strip	Ag Plated	——
③	Base	——	1	NYLON	Black	——
②	Cover	——	1	SUS	Natural	——
①	KNOB	——	1	NYLON	White	——

APPROVALS		DATE	HRO韩荣® ELECTRONICS CO.,LTD
DRAWN	J.X.Zhang	2013/9/25	
CHECKED			TITLE: TOGGLE SWITCHES
APPROVALS			PART NO.

TOLERANCES ARE			ANGLE	UNIT: mm	SCALE: 1:1	PROJ:
	30~以下	±0.30	±2°	DRAWING NO.	——	SHEET 1 OF 1
	10~30	±0.20				
	5~10	±0.15				
	~ 5	±0.10				

ECN NO.	REV.	DATE.	DESCRIPTION.	CHANGE.	CHECK.	APPRO.
——	A	——	NEW	——	——	——