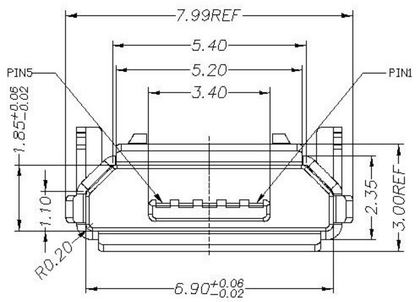

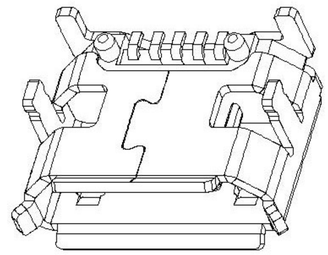

Scrolls (S)

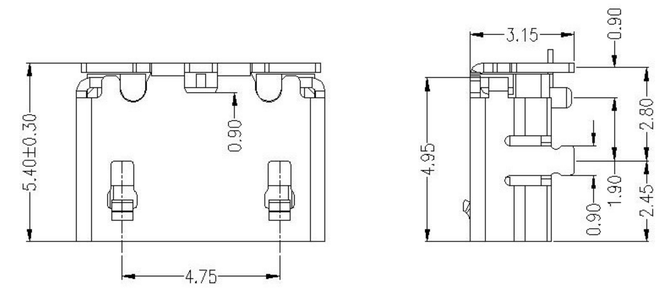

Flat(F)

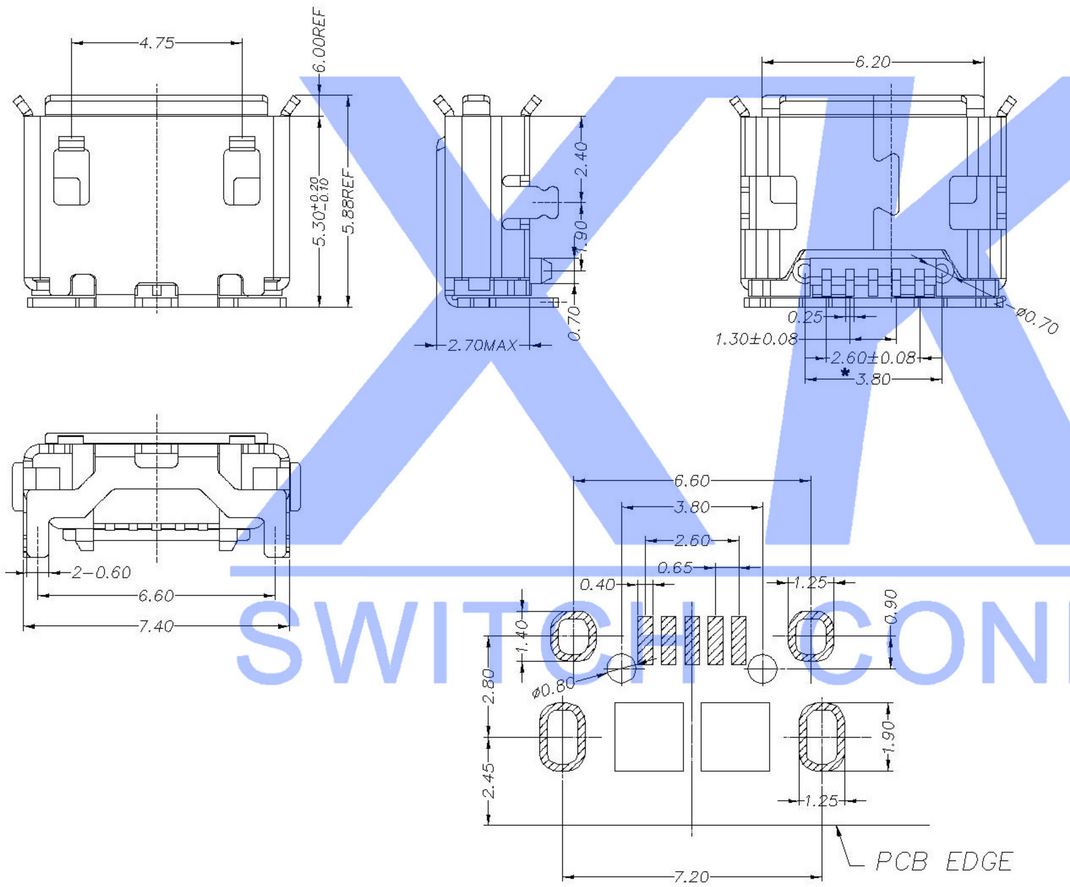

P.C.B.Land pattern

Material
Housing Material: LCP, UL94V-0, black
Contact Terminal: Copper Alloy
Metallic Shell: Brass
Electrical
Voltage Rating: 30 V AC
Current Rating: Signal (Pins 2,3,4): 1.0A, Power (Pins 1,5): 1.8A
Contact Resistance: 30mΩ Max
Insulation resistance: 1000MΩ Min
Dielectric withstanding voltage: 250V AC/Minute
Mechanical
Durability: 3,000 cycles
Mating Force: 35N (3.57Kgf) Max
Unmating Force: 8N (0.82Kgf) Min.

U254-05XX-4BHJ233-X-B

- 1:Au 1U″ / 6:Au 30U″
- T:TIN / N:NICKEL
- B:BLACK W:WHITE
- 1:PBT / 2:PA6T / 3:PA9T / 4:LCP
- B:Brass / S:Scrolls F:Flat

XKB SWITCH CONNECTOR

MARK	DESCRIPTION	DATE	REVISED	APPROVED
△X				
△X				
△X				

REVISIONS

ANGLAR	±5°
L≤4	±0.2
4<L≤16	±0.3
16<L≤63	±0.4
L>63	±0.5

UNSPECIFIED TOLERANCES

www.xk-dg.cn www.helloxkb.com www.helloxkb.cn

DSND		DATE		SCALE: N/A
DWN		DATE		VIEW:
CHKD		DATE		UNIT: mm
APPD		DATE		SIZE: A4

XKB INDUSTRIAL PRECISION CO.,LIMITED

MODEL TYPE: MICRO USB

PART NO.:

DWG NO.: U254-05XX-4BHJ233-XB

WEIGHT	SHEET	REVISION
1.0g	1/1	A0