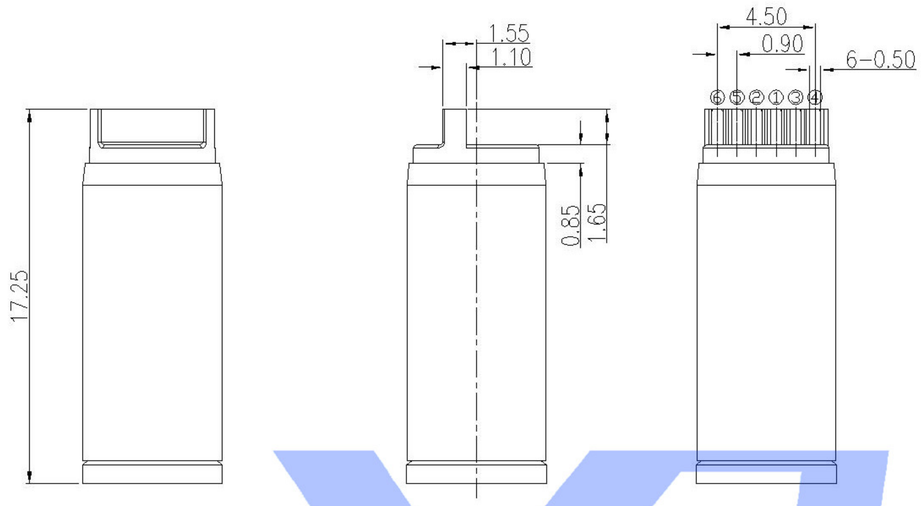

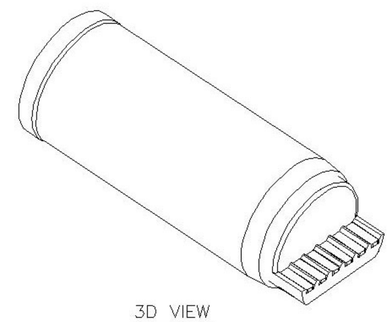

3D VIEW

NOTES:

1. MATERIAL: SEE "TABLE 1";
2. FINISH: SEE "TABLE 1";
3. ELECTRICAL:
   - 3.1. VOLTAGE RATING: 12 VAC RMS;
   - 3.2. CURRENT RATING: 0.5 AMP;
   - 3.3. CONTACT RESISTANCE: 50mΩ Max.(Initial), 100mΩ Max.(After Life test);
   - 3.4. INSULATION RESISTANCE: 100 MΩ Min., 500VDC.(Initial), 50 MΩ Min., 500VDC.(After Humidity test);
   - 3.5. WITHSTAND VOLTAGE: 500 VAC RMS 50(60)Hz, 1 minute;
4. MECHANICAL:
   - 4.1. MATING FORCE: 3.0Kgf MAX.;
   - 4.2. UNMATING FORCE: 0.3Kgf MIN.;
   - 4.3. OPERATING LIFE: 5000 CYCLES MIN.;
5. ENVIRONMENTAL:
   - 5.1. OPERATION: -30°C~+80°C.

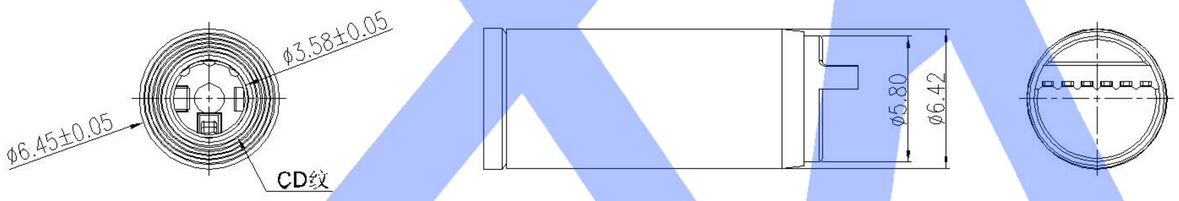

PLUG SPEC	SCHEMATIC	AFTER INSERT SCHEMATIC

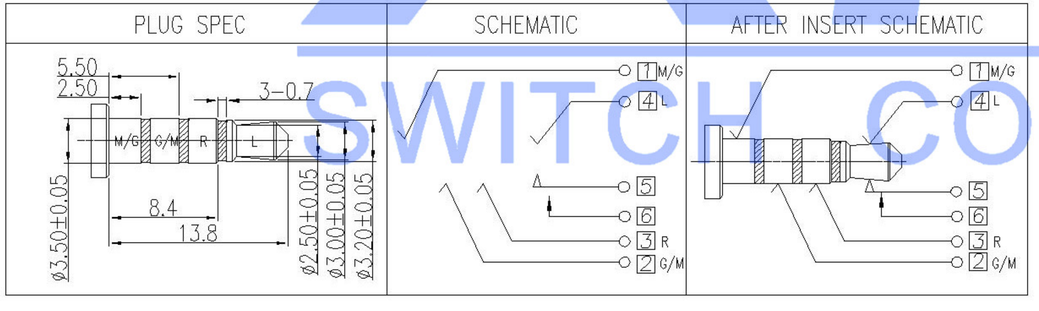

	MATERIAL	PLATING
terminal 1	Phosphor Bronze	Gold
terminal 2	Phosphor Bronze	Gold
terminal 3	Phosphor Bronze	Gold
terminal 4	Phosphor Bronze	Gold
terminal 5	Phosphor Bronze	Gold
terminal 6	Phosphor Bronze	Gold
plastic	High Temp. Thermoplastic	

Color	B:Black W: White

					ANGLAR	±5°
△X					X.X	±0.2mm
△X					X.XX	±0.1mm
△X					X.XXX	±0.05mm
MARK	DESCRIPTION	DATE	REVISED	APPROVED		
REVISIONS					UNSPECIFIED TOLERANCES	

www.xk-dg.cn www.helloxkb.com www.helloxkb.cn

DSND		DATE		SCALE: N/A	MODEL TYPE: 3.5 PHONE JACK
DWN		DATE		VIEW:	PART NO.:
CHKD		DATE		UNIT: mm	
APPD		DATE		SIZE: A4	DWG NO.: PJ-38647-X

XKB INDUSTRIAL PRECISION CO.,LIMITED

WEIGHT	SHEET	REVISION
1.0g	1/1	A0

XKB SWITCH CONNECTOR