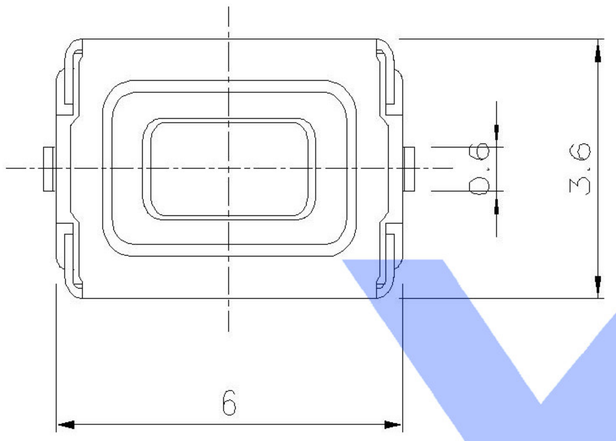

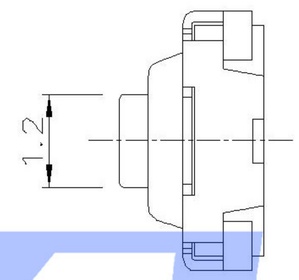

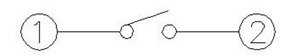

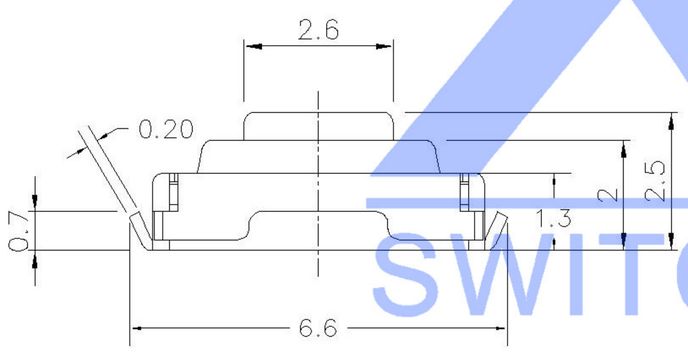

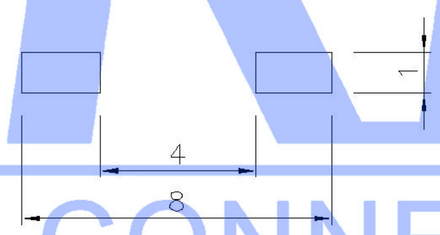

SPECIFICATION

Contact Rating：	50mA,12V DC
Contact Resistance：	100mΩ max
Insulation Resistance：	100mΩ min.500V DC
Dielectric Strength：	250V AC/1minute
Travel：	0.25mm
Operating Temp：	-30℃~+85℃
Storage Temp：	-30℃~+80℃

PAPT NO	TS-1101A-X-X
Operating Force	A:100gf B:160gf C:260gf
Height	H:2.5
color	B:black W:white R:Red

ITEM	PAPT NAMF	TER,NO	QTY	MATERIAL	FINISHING	REMARK
⑤	Terminal	——	2	Brass（0.30t）	Plating silvering	——
④	Contact	——	1	F.ag/Sus	Natural	——
③	Base	——	1	Lcp		——
②	Cover	——	1	Brass	Plating Nickel	——
①	Keystake	——	1	Pa46		——

MARK	DESCRIPTION	DATE	REVISED	APPROVED
△X				
△X				
△X				

REVISIONS

units:	mm
tolerance:	
X.X	±0.2mm
X.XX	±0.1mm
X.XXX	±0.05mm

UNSPECIFIED TOLERANCES

DSND		DATE		SCALE: N/A
DWN		DATE		VIEW:
CHKD		DATE		UNIT: mm
APPD		DATE		SIZE: A4

MODEL TYPE: TACT SWITCH

PART NO.:

DWG NO.: TS-1101A-X-X

XKB INDUSTRIAL PRECISION CO.,LIMITED

WEIGHT	SHEET	REVISION
1.0g	1/1	A0

www.xk-dg.cn www.helloxkb.com www.helloxkb.cn

XKB SWITCH CONNECTOR