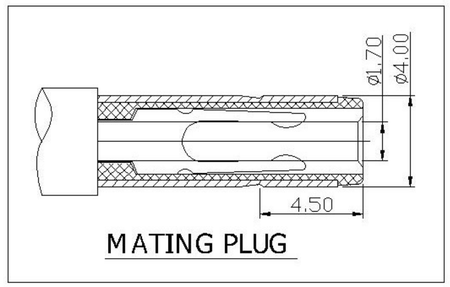

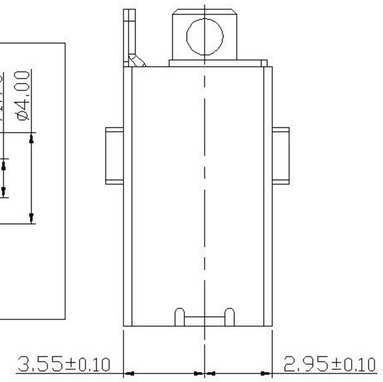

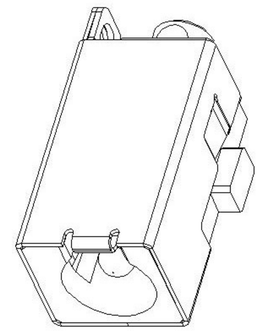

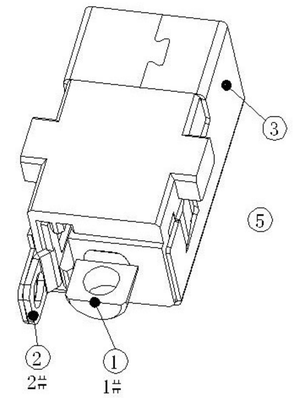

SCHEMATIC

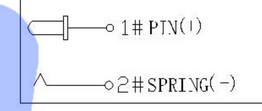

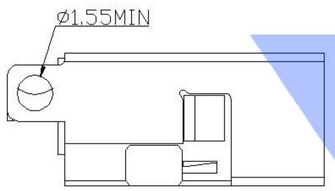

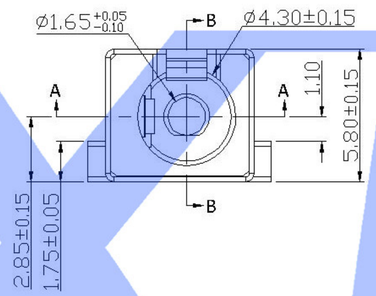

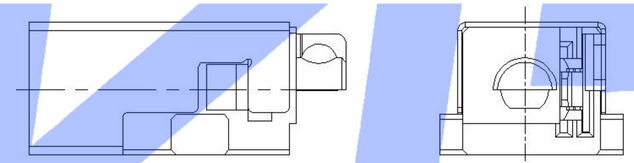

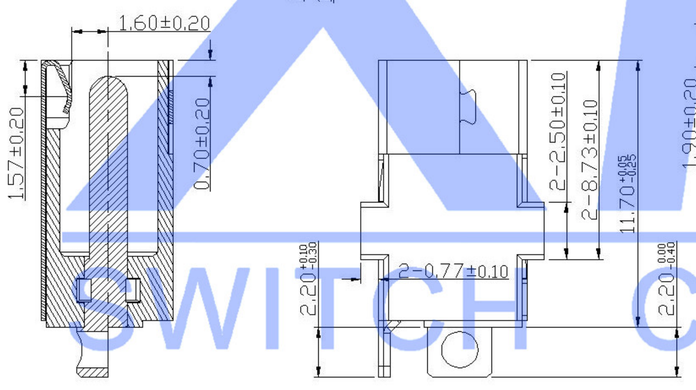

SECTION B-B

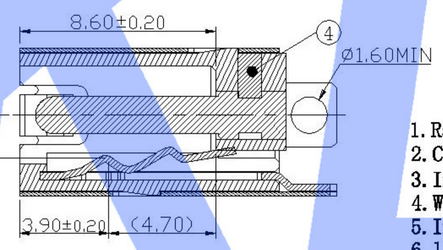

SECTION A-A

SPECIFICATION

1. Rating : DC 12V 3A;
2. Contact resistance: ≤0.03Ω;
3. Insulation resistance: ≥100MΩ (DC250V);
4. Withstand voltage: 500VAC ;
5. Insertion and extraction force: 5-30N;
6. life test: 5,000 cycles。
7. PLUG 插入后上下左右4个方向无瞬断现象。

	MATERIAL	PLATING
center pin	Brass	ag
coat	Phosphor Bronze	ni
terminal 2	Phosphor Bronze	ag
plastic	Lcp	

XKB SWITCH CONNECTOR

MARK	DESCRIPTION	DATE	REVISED	APPROVED
△X				
△X				
△X				

REVISIONS

UNSPECIFIED TOLERANCES	
ANGLAR	±5°
X.X	±0.2mm
X.XX	±0.1mm
X.XXX	±0.05mm

www.xk-dg.cn www.helloxkb.com www.helloxkb.cn

DSND		DATE		SCALE: N/A
DWN		DATE		VIEW:
CHKD		DATE		UNIT: mm
APPD		DATE		SIZE: A4

XKB INDUSTRIAL PRECISION CO.,LIMITED

MODEL TYPE: DC POWER JACK

PART NO.:

DWG NO.: DC-042F-3A-1.65

WEIGHT	SHEET	REVISION
1.0g	1/1	A0