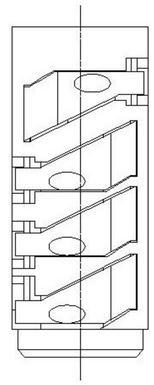

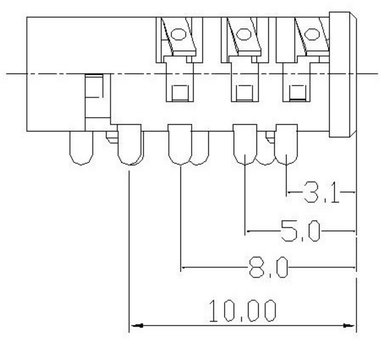

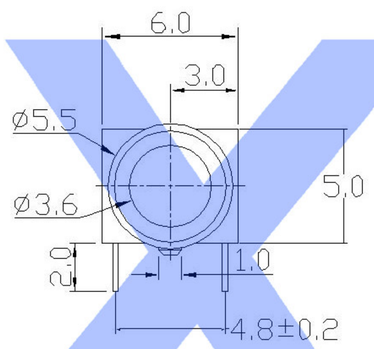

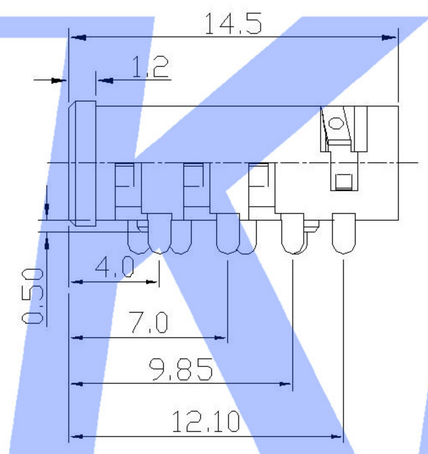

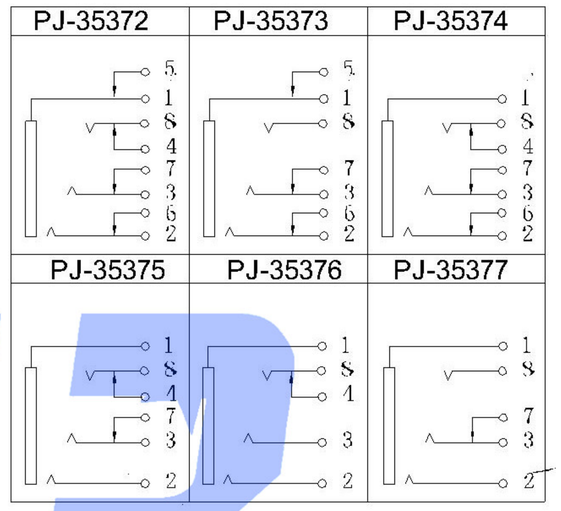

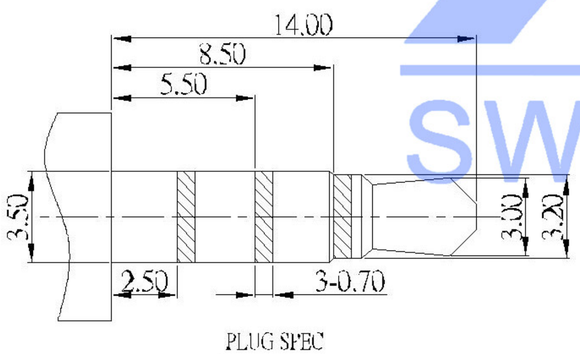

PLUG SPEC

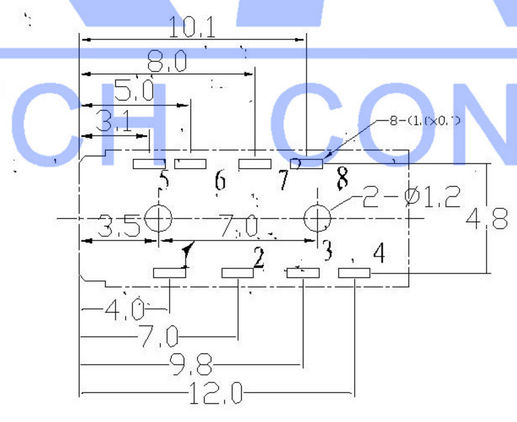

	MATERIAL	PLATING
terminal 1	Phosphor Bronze	Gold
terminal 2	Phosphor Bronze	Gold
terminal 3	Phosphor Bronze	Gold
terminal 4	Phosphor Bronze	Gold
terminal 5	Phosphor Bronze	Gold
terminal 6	Phosphor Bronze	Gold
terminal 7	Phosphor Bronze	Gold
terminal 8	Phosphor Bronze	Gold
plastic	High Temp. Thermoplastic	

XKB SWITCH CONNECTOR

MARK	DESCRIPTION	DATE	REVISED	APPROVED
△x				
△x				
△x				

REVISIONS

UNSPECIFIED TOLERANCES	
ANGLAR	±5°
X.X	±0.2mm
X.XX	±0.1mm
X.XXX	±0.05mm

www.xk-dg.cn www.helloxkb.com www.helloxkb.cn

DSND		DATE		SCALE: N/A	MODEL TYPE: 3.5 PHONE JACK
DWN		DATE		VIEW:	PART NO.:
CHKD		DATE		UNIT: mm	DWG NO.: PJ-3537X
APPD		DATE		SIZE: A4	

XKB INDUSTRIAL PRECISION CO.,LIMITED

WEIGHT	SHEET	REVISION
1.0g	1/1	A0