DORABO®

Cixi Dibo Electronics Co.,LTD

产品规格书
product specification

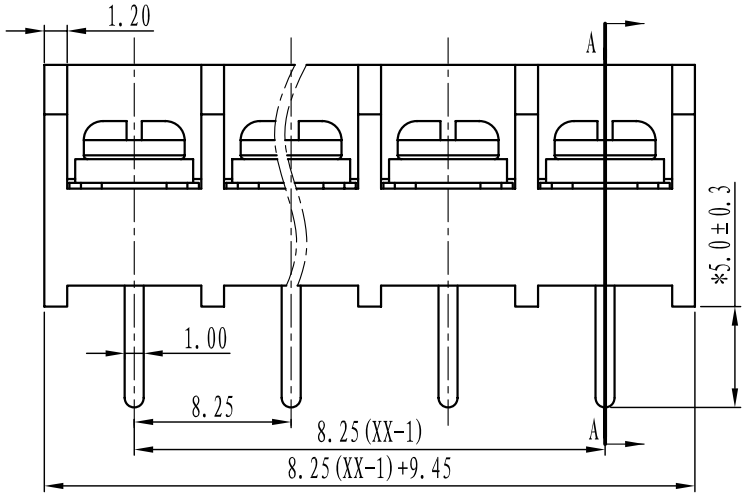

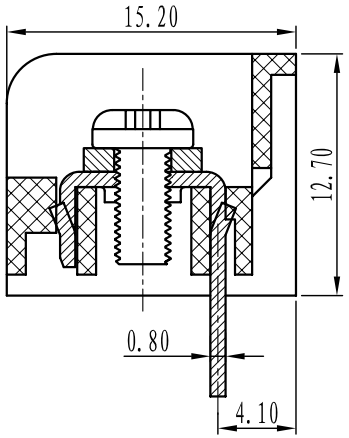

SECTION A-A

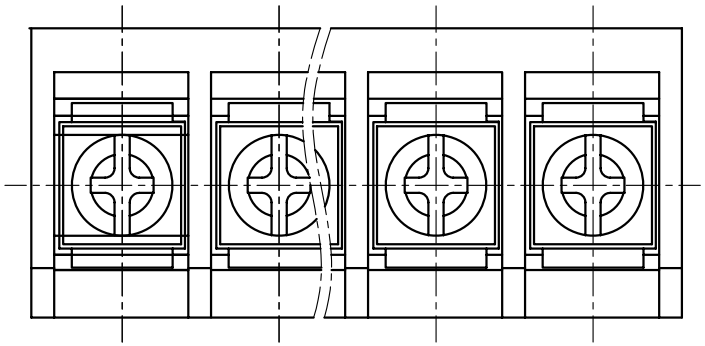

电 气 性 能/Electrical

参考标准/Standard:	UL	IEC
额定电压/Rated voltage:	300V	450V
额定电流/Rated current:	20A	32A
使用线径/Wire range:	22-12AWG	4.0mm²

耐电压/Withstanding voltage: AC2000V/1Min

绝缘电阻/Insulation resistance: 500MΩ/DC500V

机 械 性 能/Mechanical

温度范围/Temp.Range: -40°~+105°

最大锁紧力矩/Max.Talue:0.5Nm(4.5lb.in)

尺 寸/Dimensions

间 距/Pitch: 8.25mm

极 数/Poles: 2P-24P

材 质 及 电 镀/Material

塑 件/Housing: PA66,UL94V-0

螺 丝/Screws: M3,steel Nickel plated

焊 脚/Pin header: Brass,0.8,Tin plated

订 购 方 式：
HOW TO ORDER

□□ - □ □ P - □□□ - x x x 客户需求 Custmor Request

型号/Model

极数/POLE

0.未定义/No definition	
1.单间距/Sing pitch	
2.双倍间/Double pitch	

灰色/Grey	10	绿色/Green	40	透明/Transparent	70
蓝色/Blue	20	橙色/Orange	50	黄色/Yellow	80
黑色/Black	30	红色/Red	60	白色/White	90

TOLERANCES EXCEPT AS NOTED

	linear dimension					fillet	chamfer		short angle sid								
variable range	to 6	over 6 to 30	over 30 to 120	over 120 to 480	over 480 to	all	to 6	over 6 to	to 10	over 10 to 50	over 50 to 120	over 120 to	all	to 5	over 5 to 30	over 30 to 120	over 120 to
tolerance	±0.1	±0.2	±0.3	±0.5	±0.9	±0.2	±0.5	±1	1°	30'	20'	10'	0.5	0.025	0.06	0.12	0.4

单位/UNITS	mm	尺寸/SIZE	A4	比例/SCALE	
Cixi Dibo Electronics Co.,LTD					第一视角/FIRST ANGLE PROJECTION
				名称/NAME	DBT50-8.25