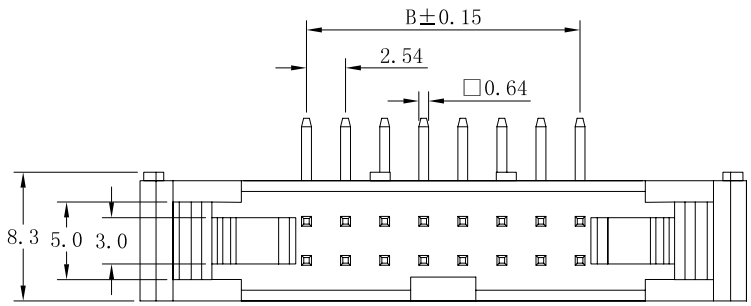

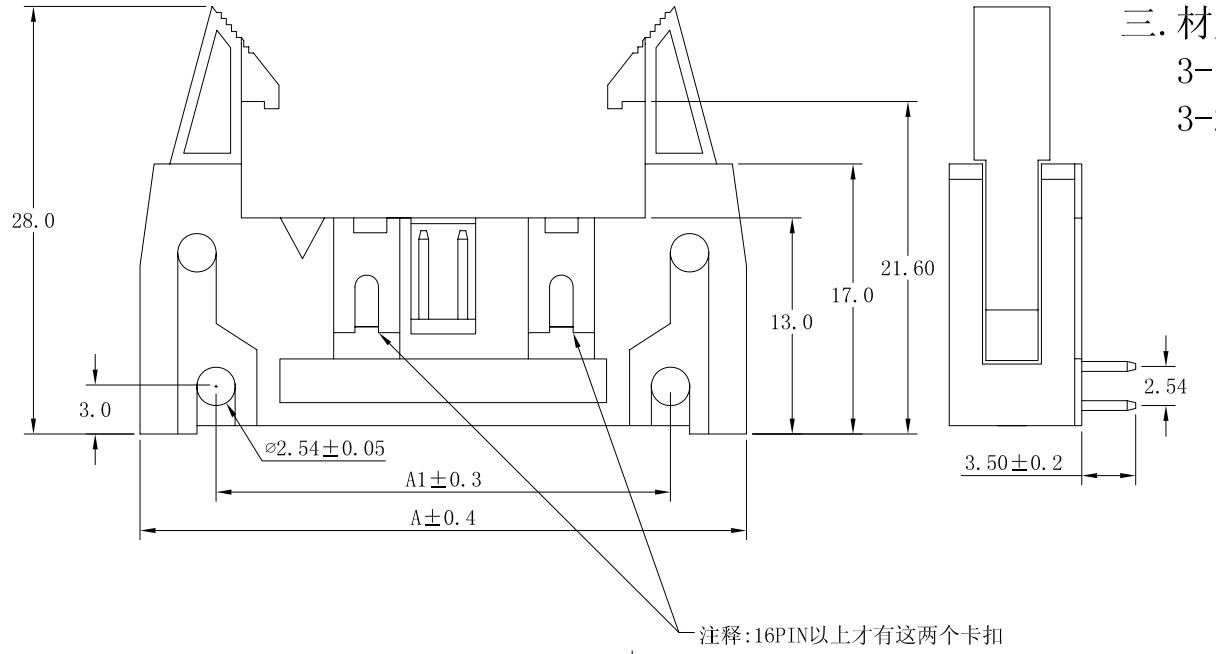

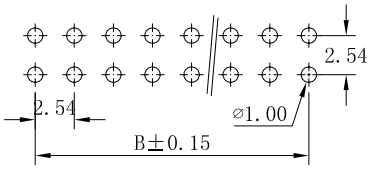

P.C.B Layout

一.电气性能:

1-1.额定电流: 3A AC DC.

1-2.接触电阻: ≤20mΩ

1-3.绝缘电阻: ≥1000MΩ

1-4.耐　　压: 550V AC/Minute

二.物理特性:

2-1.操作温度: -55℃～105℃

2-2.焊接温度: +220℃, 10s max

三.材质:

3-1.塑胶: PBT(Black) UL94V-0

3-2.插针: Brass/Gold plated

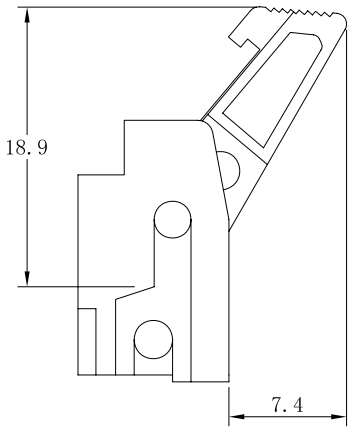

PIN	A	A1	B
6	26.68	16.88	5.08
8	29.22	19.42	7.62
10	31.76	21.96	10.16
12	34.30	24.50	12.70
14	36.84	27.04	15.24
16	39.38	29.58	17.78
18	41.92	32.12	20.32
20	44.46	34.66	22.86
22	47.00	37.20	25.40
24	49.54	39.74	27.94
26	52.08	42.28	30.48
28	54.62	44.82	33.02
30	57.16	47.36	35.56
32	59.70	49.90	38.10
34	62.24	52.44	40.64
36	64.78	54.98	43.18
38	67.32	57.52	45.72
40	69.86	60.06	48.26
42	72.40	62.60	50.80
44	74.94	65.14	53.34
46	77.48	67.68	55.88
48	80.02	70.22	58.42
50	82.56	72.76	60.96
52	85.10	75.30	63.50
54	87.64	77.84	66.04
56	90.18	80.38	68.58
58	92.72	82.92	71.12
60	95.26	85.46	73.66
62	97.80	88.00	76.20
64	100.34	90.54	78.74

图名:	NJ2.54-2xNAW	未标注公差				绘制:		单位:	MM
		XX.	±0.40	XX.°	±2°	签发:		比例:	1:1
		X.	±0.30	.XX°	±1°				
图号:	XXXXXXXXXXXXXXXXXX	.X	±0.20			审核:		视图:	
		.XX	±0.15						