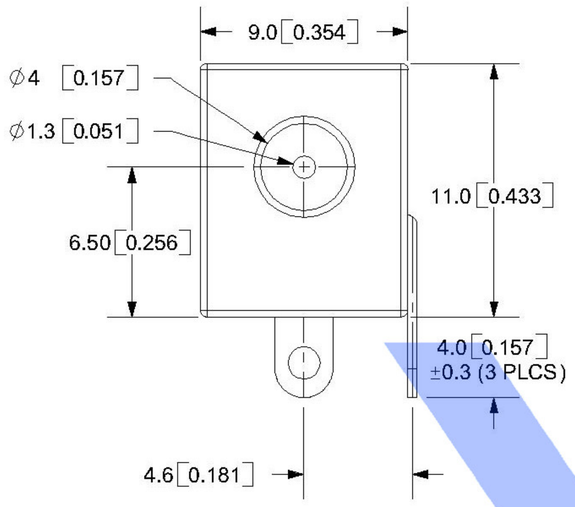

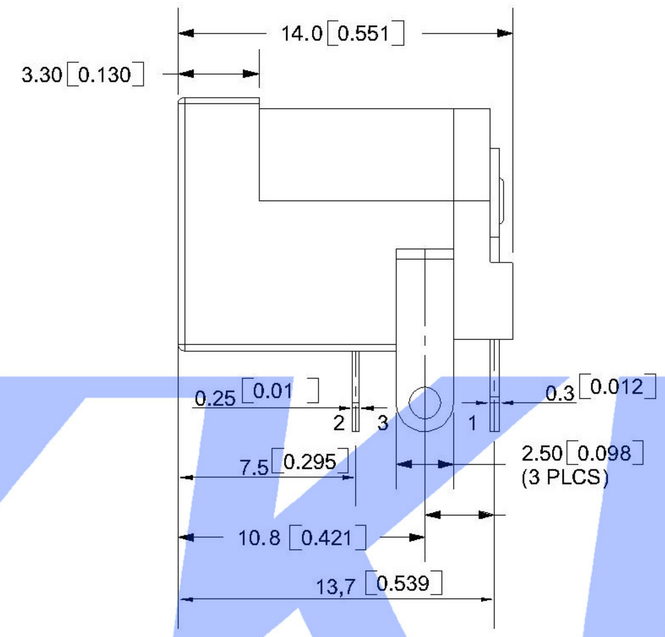

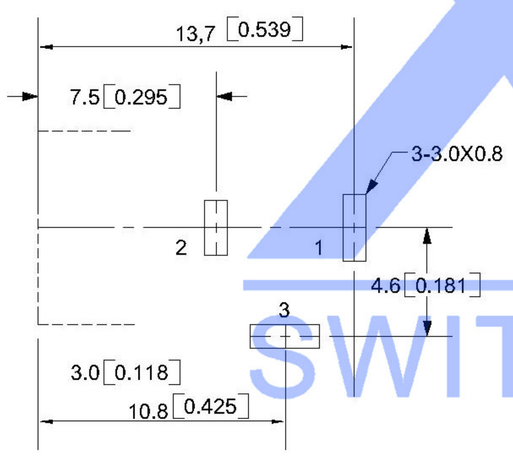

PCB LAYOUT
TOP VIEW

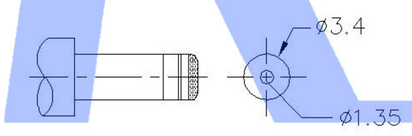

MATING PLUG
Jack Insertion Depth: 9.15 mm

SCHEMATIC	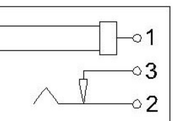
Model	DC-005C-2A
Center Pin	Ø1.3 mm

	MATERIAL	PLATING
center pin	Brass	tin
terminal 1	Brass	tin
terminal 2	Phosphor Bronze	tin
terminal 3	Brass	tin
plastic	Pbt	

XKB SWITCH CONNECTOR

MARK	DESCRIPTION	DATE	REVISED	APPROVED
△X				
△X				
△X				

REVISIONS

UNSPECIFIED TOLERANCES	
ANGLAR	±5°
X.X	±0.2mm
X.XX	±0.1mm
X.XXX	±0.05mm

www.xk-dg.cn www.helloxkb.com www.helloxkb.cn

DSND		DATE		SCALE: N/A	MODEL TYPE: DC POWER JACK
DWN		DATE		VIEW:	PART NO.:
CHKD		DATE		UNIT: mm	DWG NO.: DC-005C-2A-1.3
APPD		DATE		SIZE: A4	

XKB INDUSTRIAL PRECISION CO.,LIMITED

WEIGHT	SHEET	REVISION
1.0g	1/1	A0