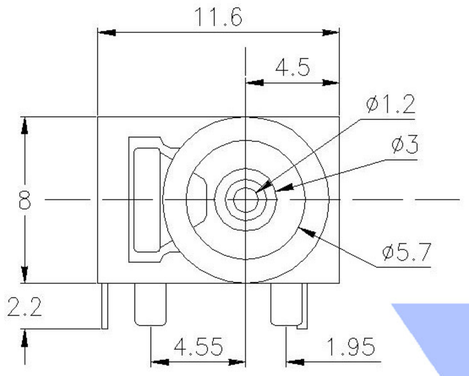

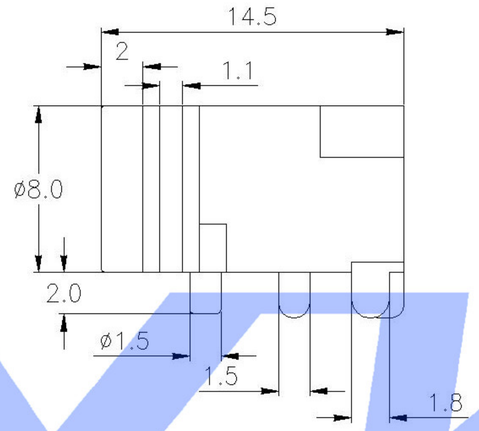

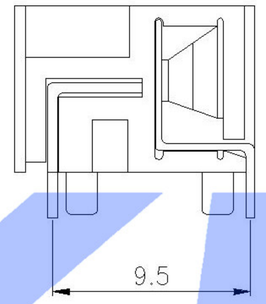

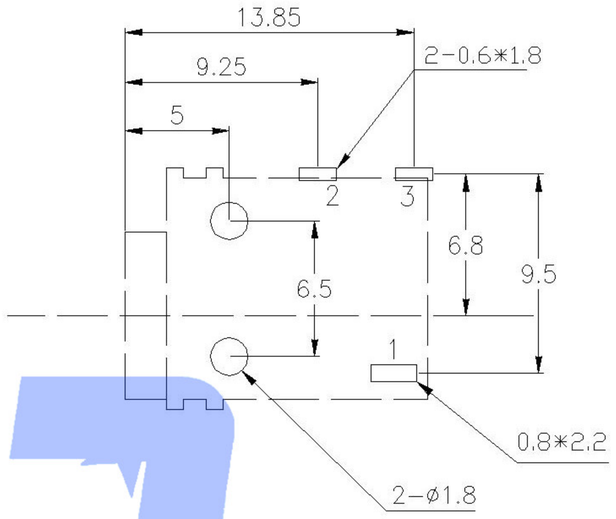

RECOMMENDED PCB LAYOUT

TOP VIEW

SCHEMATIC	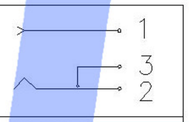
Model	DC-037G

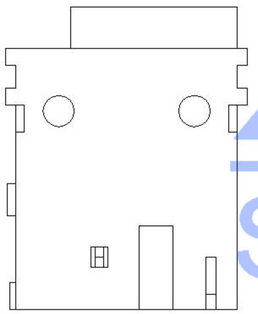

NOTES:

1.ELECTRIC CHARACTERISTICS:
- 1-1.CONTACT CURRENT RATING: 4A.
- 1-2.CONTACT VOLTAGE RATING: 20V DC.
- 1-3.CONTACT RESISTANCE: 30mΩ MAX.;
- 1-4.DIELECTRIC WITHSTANDING VOLTAGE: 500V AC;
- 1-5.INSULATION RESISTANCE: 100MΩ MIN.AT DC 500V.

2.MECHANICAL CHARACTERISTICS:
- 2-1.DURABILITY:3000 CYCLES.
- 2-2.INSERTION AND EXTRACTION FORCE:
- 2-2.1.INSERTION FORCE: 30N MAX.
- 2-2.2.EXTRACTION FORCE: 3N MIN.

3.ENVIRENMENT CHARACTERISTICS:
- 3-1.OPERATING TEMPERATURE:-25℃~+85℃.
- 3-2.HUMIDTY:45~85% RH.

	MATERIAL	PLATING
terminal 1	Brass	tin
terminal 2	Phosphor Bronze	tin
terminal 3	Brass	tin
plastic	Pbt	

XKB
SWITCH CONNECTOR

MARK	DESCRIPTION	DATE	REVISED	APPROVED	ANGLAR	±5°
△X					X.X	±0.2mm
△X					X.XX	±0.1mm
△X					X.XXX	±0.05mm

REVISIONS — UNSPECIFIED TOLERANCES

www.xk-dg.cn www.helloxkb.com www.helloxkb.cn

DSND		DATE		SCALE: N/A	MODEL TYPE: DC POWER JACK
DWN		DATE		VIEW:	PART NO.:
CHKD		DATE		UNIT: mm	DWG NO.: DC-037G
APPD		DATE		SIZE: A4	

XKB INDUSTRIAL PRECISION CO.,LIMITED

WEIGHT	SHEET	REVISION
1.0g	1/1	A0