MAPX	MODIFICATION	DATE

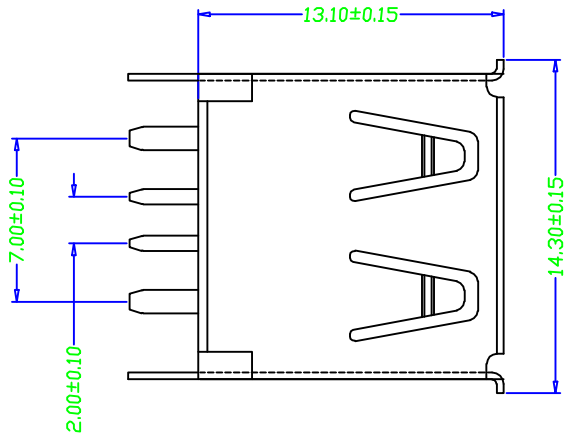

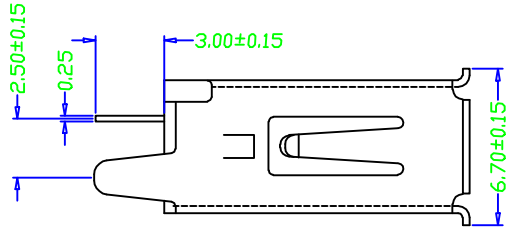

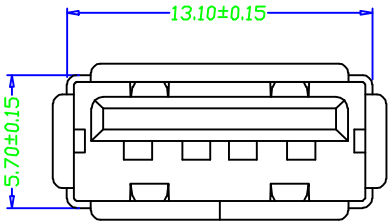

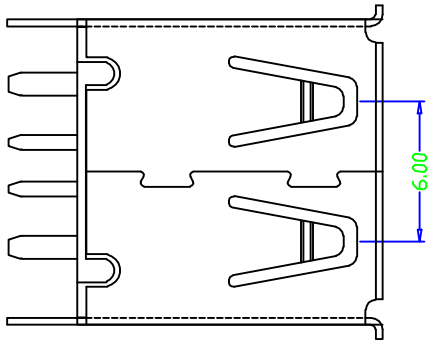

NOTES:

1. HOUSING: ORANGE, UL94V-0 .
   TERMINAL: SEE NOTES.
   SHELL: SEE NOTES.

SPECIFICATION:

1. ELECTRICAL CHARACTERISTIC:
   Current rating:5.0A Max
   CONTACT RESISTANCE: 30MΩ MAX
   DIELECTRIC WITHSTANDING VOLTAGE: 500V AC FOR 1MIN
   INSULATION RESISTANCE: 1000MΩ MIN
2. MECHANICAL CHARACTERISTIC:
   INSERTION FORCE: 35N(3.57KGF) MAX
   EXTRACTION FORCE: 10~35N(1.02~3.57KGF)MIN
   DURABILITY: 1500 CYCLES EXTRACTION FORCE:10~35N
   5000 CYCLES MIN
   5000 CYCLES EXTRACTION FORCE:3~35N
3. ENVIRONMENTAL:
   OPERATING TEMPERATURE: -55℃+85℃
4. Contact finish:
   01:Selective Gold Flash
   02:Selective Gold 3U"
   03:Selective Gold 5U"
   04:Selective Gold 15U"
   05:Selective Gold 30U"

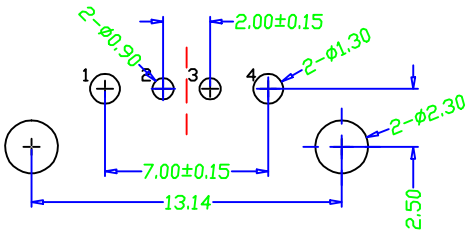

PCB LAYOUT

产品图 PRODUCT CHART DWG				深圳市精拓金电子有限公司							
公差一览表 TOLERANCE UNLESS OTHERMSE				单位 UNITS	MM	制图 DRAWING	Z-Y-B	制图料号 PRODUCT PART NO.			
X.	±0.25	X.	±5.°	比例 SCALE	1:1	审核 CHKD		产品名称 PRODUCT NO.	USB AF 180度插板式有边（13.1）		
.X	±0.20	.X	±2.°	日期 DATE	2014.07.24	核准 APPD		角法 VIEW		版本 VER	A0
.XX	±0.15	.XX	±1.°								
.XXX	±0.10	.XXX	±0.5°								