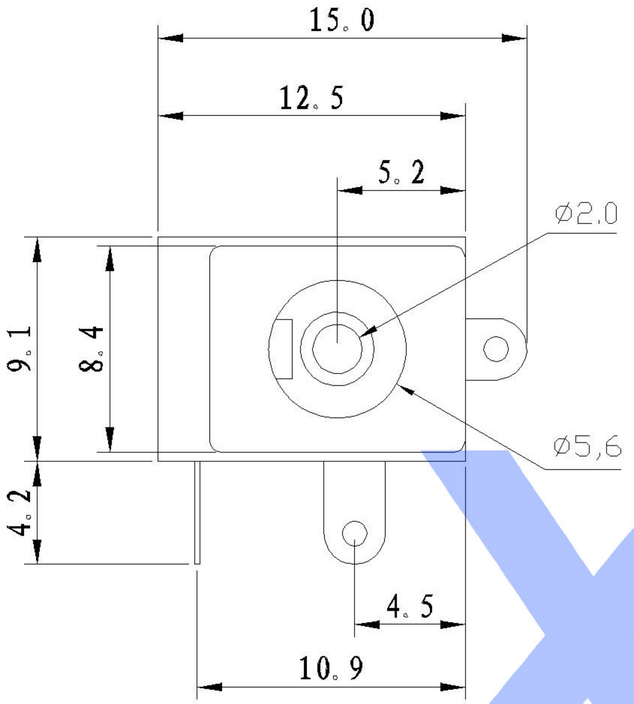

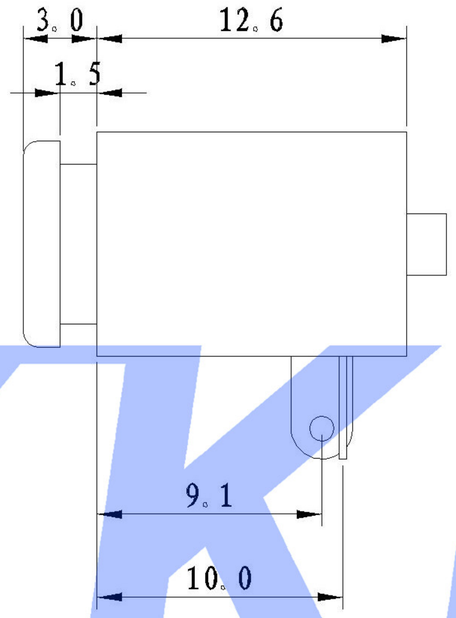

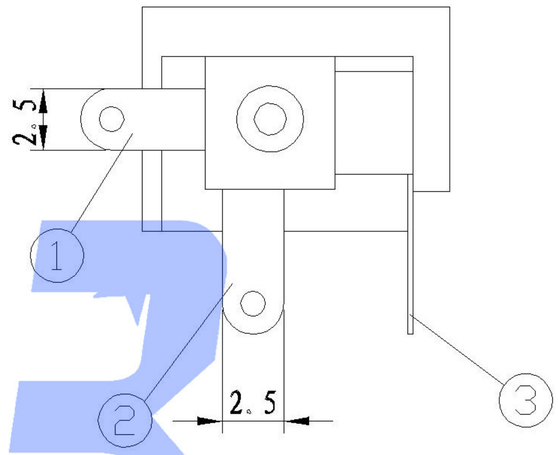

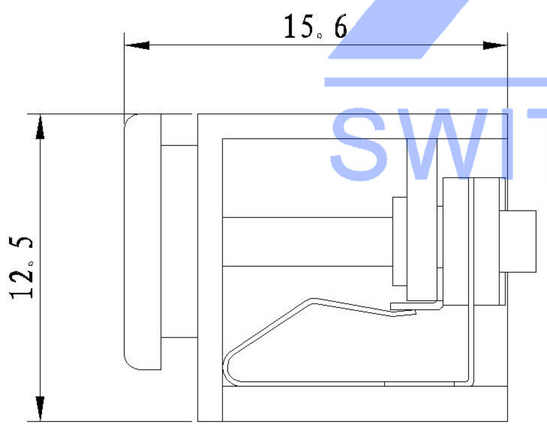

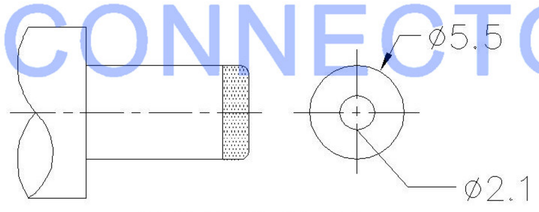

MATING PLUG
Jack Insertion Depth: 9.0 mm

SCHEMATIC	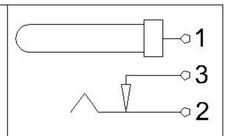
Model	DC-009
Center Pin	Ø2.0 mm
	Ø2.5 mm

XKB SWITCH CONNECTOR

MARK	DESCRIPTION	DATE	REVISED	APPROVED		
					ANGLAR	±5°
△X					X.X	±0.2mm
△X					X.XX	±0.1mm
△X					X.XXX	±0.05mm

REVISIONS — UNSPECIFIED TOLERANCES

www.xk-dg.cn www.helloxkb.com www.helloxkb.cn

DSND		DATE		SCALE: N/A	MODEL TYPE: DC POWER JACK
DWN		DATE		VIEW:	PART NO.:
CHKD		DATE		UNIT: mm	
APPD		DATE		SIZE: A4	DWG NO.: DC-009-2.0

XKB INDUSTRIAL PRECISION CO.,LIMITED

WEIGHT	SHEET	REVISION
1.0g	1/1	A0