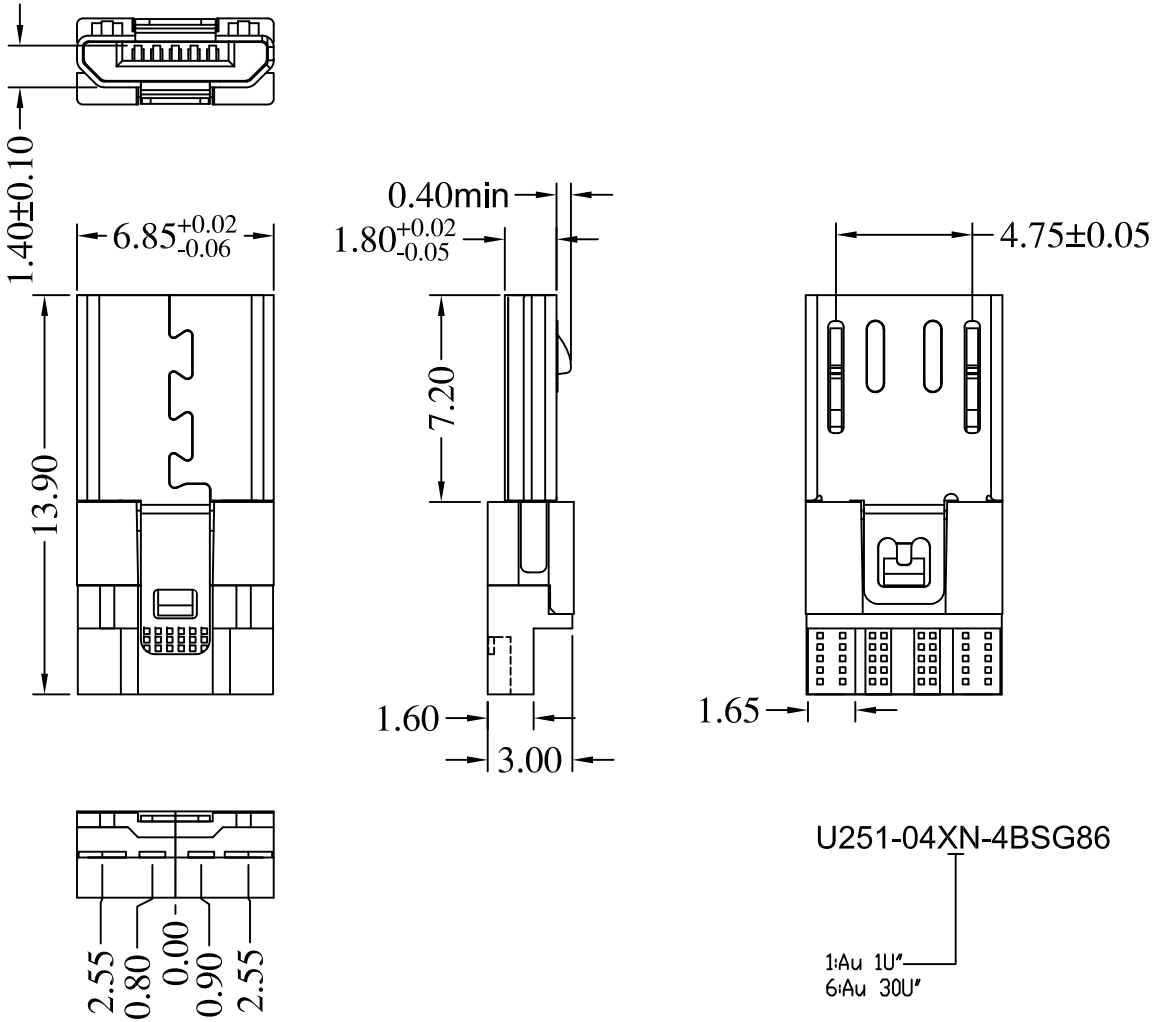

NOTES:

1.Material:

1.1:Housing Material:LCP+30%G.F BLACK UL94-V0

1.2:Molding::LCP+30%G.F BLACK UL94-V0

1.3:Metallic Shell:SUS304, T=0.20±0.02mm.

1.4:SPRING:SUS301, T=0.35±0.05mm.

1.5:Contact Terminal:H65,T=0.20±0.02mm

2.Finish:

2.1 Contact Terminal:Test point:Ni 50u"/Au 1~3u" MIN.
Soldering area:Ni 50u"/Tin(PB Free) 100u" MIN.
The other area:Ni 50u" MIN.

2.2 Metallic Shell：Ni 60u" MIN.

3.Specification:

3.1:Rating:
Rated voltage:AC 100V. Rated current:1A.

3.2:Electrical:
Contact resistance:
50mΩ MAX. at 20mV MAX, 50mA.
Insulation resistance:
100MΩ MIN. at 500V DC for 1Minute.
Dielectric withstanding voltang:
No discharge,flashover or breakdown
at 500V/AC 1Minute.

3.3:MECHANICAL:
INSERTION FORCE：35N Max.
EXTRACTION FORCE：8N Min.
DURABILITY：10000 Cycles .

MARK	DESCRIPTION	DATE	REVISED	APPROVED
Δx				
Δx				
Δx				

REVISIONS

UNSPECIFIED TOLERANCES	
ANGLAR	±5°
L≤4	±0.2
4<L≤16	±0.3
16<L≤63	±0.4
L>63	±0.5

www.xk-dg.cn www.1k0k.com www.1k0k.cn

DSND		DATE		SCALE: N/A
DWN		DATE		VIEW:
CHKD		DATE		UNIT: mm
APPD		DATE		SIZE: A4

XKB INDUSTRIAL PRECISION CO.,LIMITED

MODEL TYPE: USB2.0

PART NO.:

DWG NO.: U251-04XN-4BSG86

WEIGHT	SHEET	REVISION
1.0g	1/1	A0