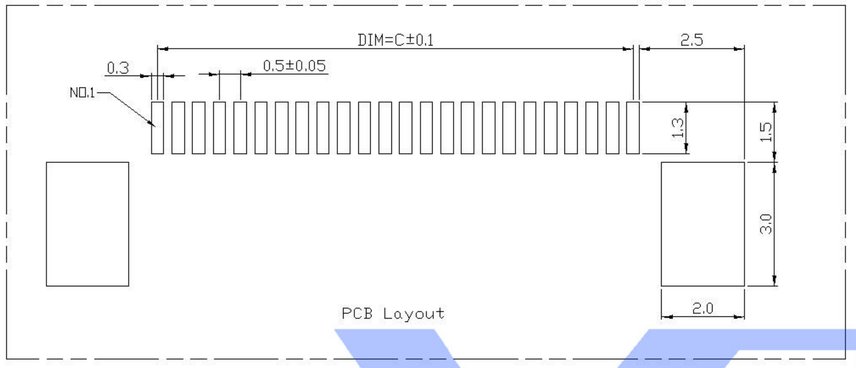

PCB Layout

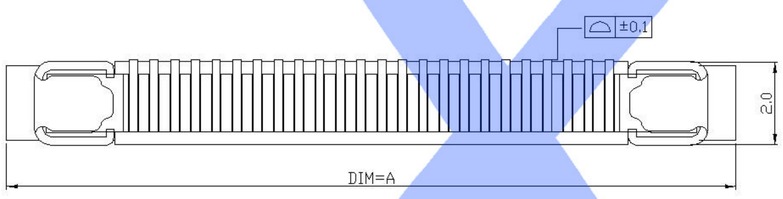

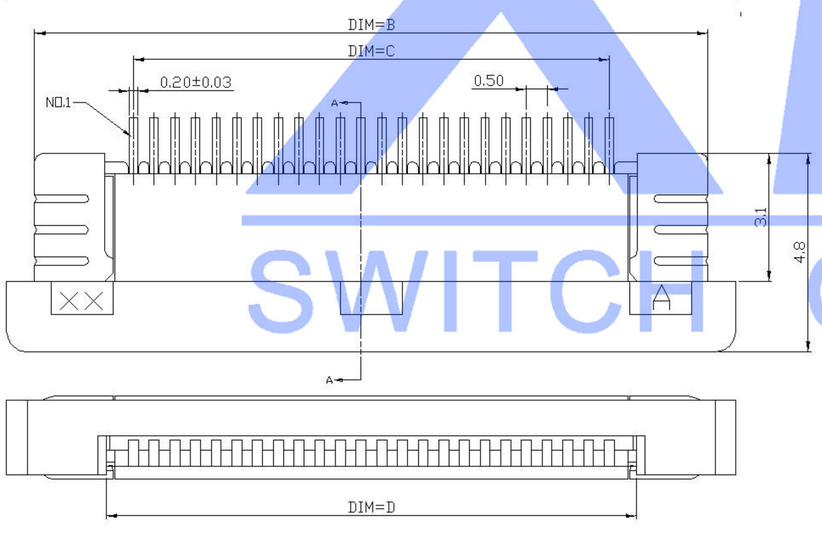

Electrical Characteristics:
Current rating: 0.4A AC/DC
Voltage rating: 50V AC/DC
Temperature range: −25°C~+85°C
Withstand Voltage: 500V AC/Minute
Contact Resistance: ≤20mΩ
Insulation resistance: ≥500MΩ
Relative Humidity: 93%+40°C

Material Description:
Terminal: Phosphor Bronze Tin−plated
Fitting Nail: Brass Tin−plated
Housing: Thermoplastic(UL94V−0)
Slider: Thermoplastic(UL94V−0)

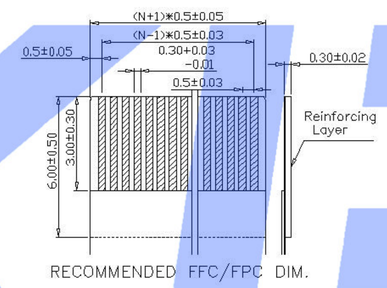

RECOMMENDED FFC/FPC DIM.

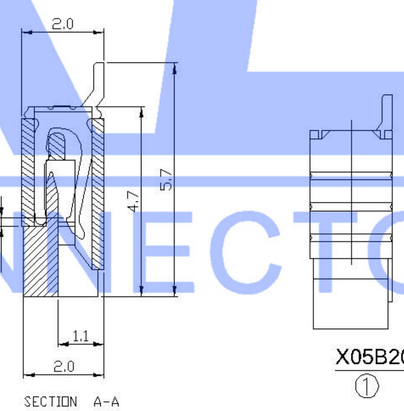

SECTION A-A
下接触

Pin	DIM A	DIM B	DIM C	DIM D
60	35.60	34.60	29.50	30.65
59	35.10	34.10	29.00	30.15
58	34.60	33.60	28.50	29.65
57	34.10	33.10	28.00	29.15
56	33.60	32.60	27.50	28.65
55	33.10	32.10	27.00	28.15
54	32.60	31.60	26.50	27.65
53	32.10	31.10	26.00	27.15
52	31.60	30.60	25.50	26.65
51	31.10	30.10	25.00	26.15
50	30.60	29.60	24.50	25.65
49	30.10	29.10	24.00	25.15
48	29.60	28.60	23.50	24.65
47	29.10	28.10	23.00	24.15
46	28.60	27.60	22.50	23.65
45	28.10	27.10	22.00	23.15
44	27.60	26.60	21.50	22.65
43	27.10	26.10	21.00	22.15
42	26.60	25.60	20.50	21.65
41	26.10	25.10	20.00	21.15
40	25.60	24.60	19.50	20.65
39	25.10	24.10	19.00	20.15
38	24.60	23.60	18.50	19.65
37	24.10	23.10	18.00	19.15
36	23.60	22.60	17.50	18.65
35	23.10	22.10	17.00	18.15

X05B20 L XX X
① ② ③ ④

① Series Name :X05B20=0.5 mm Pitch(H=2.0mm)
② Assembly style : L:Low Contact SMT Type U:Upper Contact SMT Type
D:Double-Face Contact SMT Type H:Back-flip Double-Face Contact SMT Type
③ Number of terminals :XX=35-60PIN
④ Plating : G:Gold Flash Over Nickel T:Tin Over Nickel

MARK	DESCRIPTION	DATE	REVISED	APPROVED
△X				
△X				
△X				

REVISIONS

ANGLAR	±5°
L≤4	±0.2
4<L≤16	±0.3
16<L≤63	±0.4
L>63	±0.5

UNSPECIFIED TOLERANCES

www.xk-dg.cn www.helloxkb.com www.helloxkb.cn

DSND		DATE		SCALE: N/A	MODEL TYPE: FPC CONNECTOR
DWN		DATE		VIEW:	PART NO.:
CHKD		DATE		UNIT: mm	DWG NO.: X05B20LXXX
APPD		DATE		SIZE: A4	

XKB INDUSTRIAL PRECISION CO.,LIMITED

WEIGHT	SHEET	REVISION
1.0g	1/1	A0

XKB SWITCH CONNECTOR